Doosan Machine Tools

HIGH PRODUCTIVITY TWIN TABLE
VERTICAL MACHINING CENTER

# VC

## 430 · 510

**Basic information**

Basic Structure
Cutting
Performance

**Detailed Information**

Standard/Optional Specifications
Diagram
Machine / NC Unit Specifications

**Customer Support Service**

# VC 430 / VC 510

**The VC430/VC510 twin table vertical machining center provides features to optimize high precision during long periods of operation. These machines are based on a moving column structure, and by utilizing the rapid workpiece change by rotating pallet and high powered spindle, productivity is maximized.**

## Contents


**02 Product Overview**

**Basic Information**

**04** Basic Structure
**07** Cutting Performance

**Detailed Information**

**08** Standard / Optional Specifications
**11** Diagram
**15** Machine / NC Unit Specifications

**18 Customer Support Service**


### High-rigidity and Column-moving Structure

High-rigidity cast structure is excellent for vibration absorption and minimizes deformation under heavy load. The column moving design guarantees high accuracy even after a prolonged period of operation and minimizes footprint.

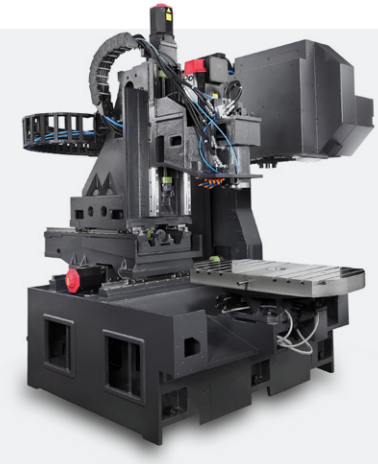

### High-speed Auto Pallet Changer

The dual table equipped with standard auto-indexing pallet enables stable positioning and improved productivity with minimized idle time.

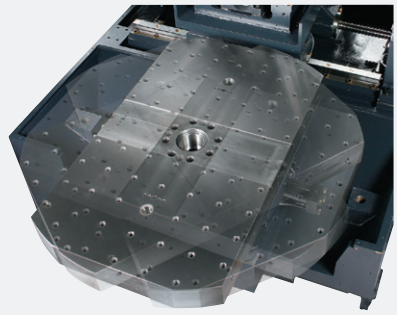

### Convenience

Diverse optional features are available for customized requirements.

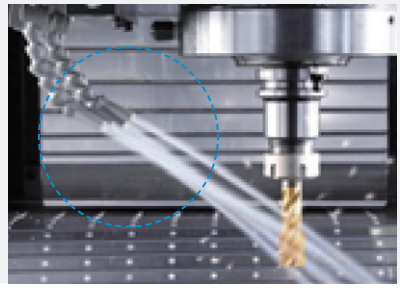

## Basic Structure

The high rigidity machine structure maintains stable accuracy for long periods even during heavy duty cutting.

### Stable column moving structure

The moving column structure eliminates the root causes of fatigue and vibration caused by high frequency rapid movements over long periods of running and optimizes durability and accuracy. The machine footprint is also minimized.

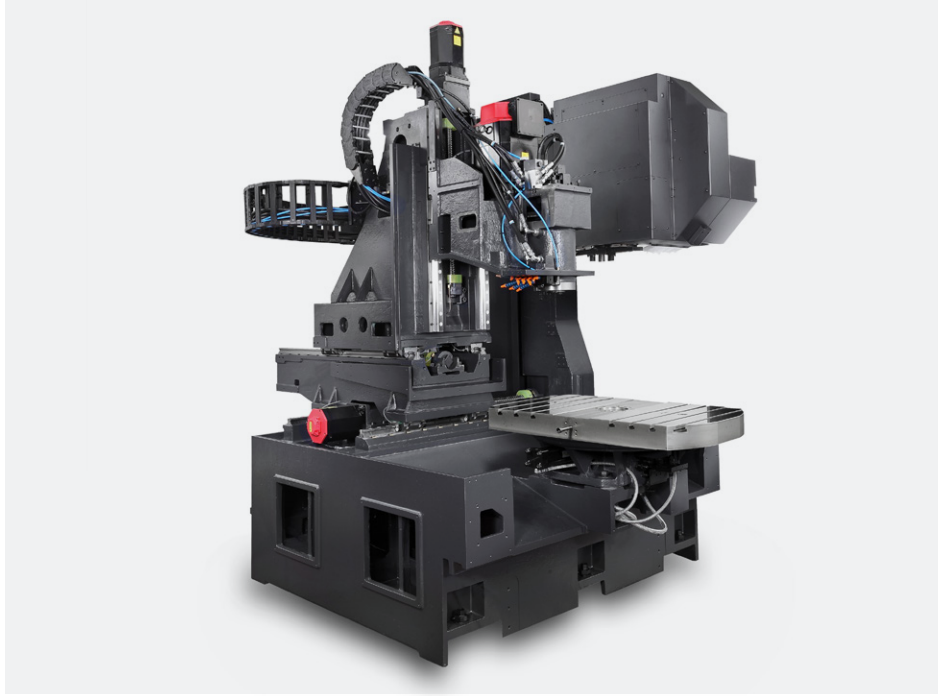

## Axis Feed System

### High-precision feed structure

Roller-type Linear Guideway and the highly rigid coupling are adopted for improving rigidity and accuracy of the linear feed system in X, Y and Z directions. The nut cooling system minimizes thermal displacement of the ball screw to satisfy the speed and the accuracy requirements.

**High-rigidity Roller Type Linear Guideway**

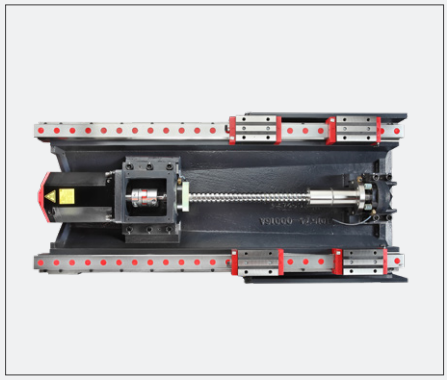

Rigidity and accuracy of feed system are improved with Roller Type LMG and Coupling.

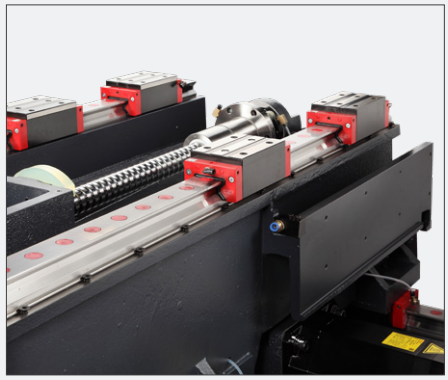

Roller type linear guideway

| Description | | X | Y | Z |
|---|---|---|---|---|
| VC 430 | Travels (mm)(inch) | 560(22.0) | 430(16.9) | 570(22.4) |
| | Rapid traverse rate (m/min)(imp) | 40(1574.8) | 40(1574.8) | 36(1417.3) |
| VC 510 | Travels (mm)(inch) | 762(30.0) | 516(20.3) | 570(22.4) |
| | Rapid traverse rate (m/min)(imp) | 40(1574.8) | 40(1574.8) | 32(1259.8) |

## Tool Changer

### Tool magazine

The drum-shape tool magazine mounted on the right of the machine is driven by the motor and the cam to guarantee high reliability. The magazine can be expanded to hold maximum 40 tools when optionally selected.

Tool storage capacity

**30 Tools**

**40 Tools** option

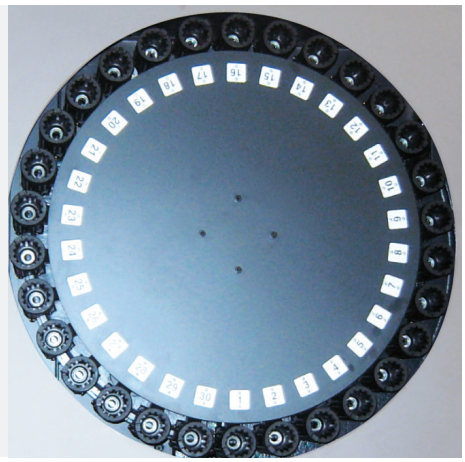

### Automatic tool changer

Rapid tool change at speed of 3 seconds for T-T-T to enhance productivity. The drum-shape ATC mounted on the right of the machine is interoperated with the CAM.

Tool change time (T-T-T)

**1.3 / 1.6 s** option

Tool change time (C-T-C)

**4.3 / 4.6 s** option

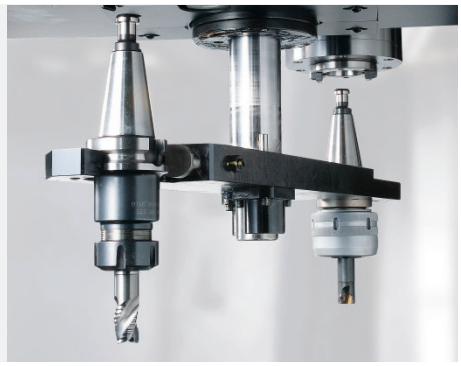

## Pallet

### Automatic Rapid Pallet Changer (APC)

- The dual table with the standard automatic indexing pallet is of rack & pinion type and rotates through 180 degrees. It features a 6 ton clamping force.
- The table with the horizontal machine bed directly connected allows stable positioning and minimal non-cutting time to improve productivity.
- Hydraulic lines for fixtures and electrical cables for rotary tables can be supplied via the central column of the indexing pallet, thus allowing pallet rotation whilst maintaining services connection.

| Model | VC 430 | VC 510 |
|---|---|---|
| Pallet change time | 5 s | 5.5 s |
| Pallet loading capacity | 2-300 kg (2-661.4 lb) | 2-350 kg (2-771.6 lb) |
| Pallet size | 2-712 × 490 mm (2-28.0 x 19.3 inch) | 2-860 × 570 mm (2-33.9 x 22.4 inch) |

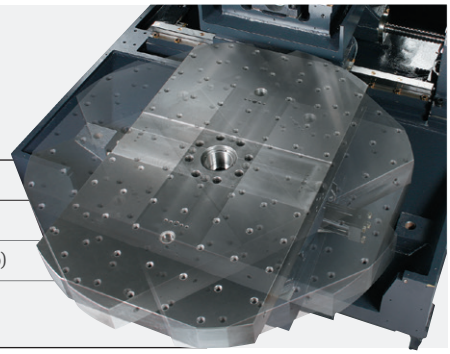

# Spindle

The high speed spindle maintains accuracy during fine machining and also provides sufficient power for heavy duty cutting performance.

## High-Speed, High-Precision Spindle

The high-speed spindle of 10,000 (12,000) rpm is supported high-precision bearing for ensuring stable accuracy under high speed cutting operation. In addition, a spindle motor of higher power is mounted for heavy duty cutting.

### High speed spindle

**10000** r/min
* Belt type

**12000** r/min option
* Direct type

**Motor power (30min/con.)**
**18.5 / 15** kW
**(24.8 / 20.1 Hp)**

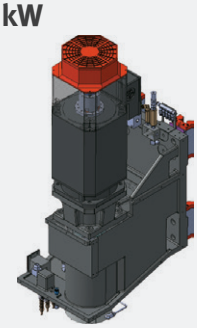

### High torque spindle

**6000** r/min option
* Belt type
*** Only VC 510**

**Motor power (30min/con.)**
**15/11** kW
**(20.1 / 14.8 Hp)**

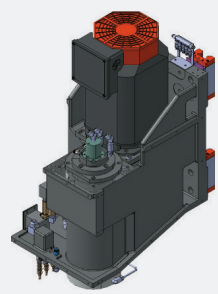

### Spindle Head Cooling System

The spindle cooling system maintains temperature relative to the ambient value and circulates cooling oil around the bearings to reduce thermal growth due to high speed running over long periods.

* Not available for 6000 rpm.

### Dual Contact Spindle

Tool rigidity is enhanced by the firm clamping of the spindle. Tool lifecycle and cut-surface roughness have been improved as a result of the reduced vibration realized by the dual contact spindle.

* Both of BT40 tool and dual contact spindle (BIG PLUS) used

## Cutting Performance

Delivers excellent performance under diverse machining conditions.

### VC 430 / VC 510

| | | | |
|---|---|---|---|
| **Face mill** Carbon steel (SM45C) | | | 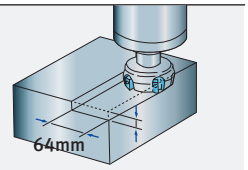  |
| ø80mm Face mill (6Z) | | | |
| Machining rate ($cm^3$/min(in$ch^3$/min)) | Spindle speed (r/min) | Feedrate (mm/min(ipm)) | |
| 432(26.4) | 1500 | 2700(106.3) | |
| **Face mill** Gray casting (GC25) | | | 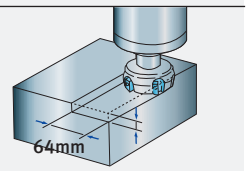  |
| ø80mm Face mill (6Z) | | | |
| Machining rate ($cm^3$/min(in$ch^3$/min)) | Spindle speed (r/min) | Feedrate (mm/min(ipm)) | |
| 691(42.2 ) | 1500 | 3600(141.7) | |
| **Face mill** Aluminum (AL6061) | | | 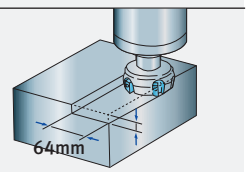  |
| ø80mm Face mill (6Z) | | | |
| Machining rate ($cm^3$/min(in$ch^3$/min)) | Spindle speed (r/min) | Feedrate (mm/min(ipm)) | |
| 1785(108.9) | 1500 | 5580(219.7) | |
| **End mill** Carbon steel (SM45C) | | | 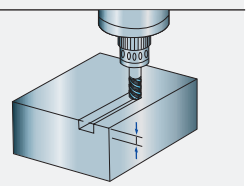 |
| ø30mm Endmill (6Z) | | | |
| Machining rate ($cm^3$/min(in$ch^3$/min)) | Spindle speed (r/min) | Feedrate (mm/min(ipm)) | |
| 36(2.2) | 222 | 80(3.1) | |
| **U-drill** Carbon steel (SM45C) | | | 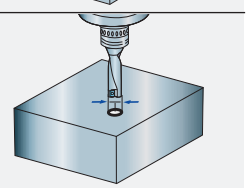 |
| Machining rate ($cm^3$/min(in$ch^3$/min)) | Spindle speed (r/min) | Feedrate (mm/min(ipm)) | |
| 172(10.5) | 750 | 84(3.3) | |
| **Tap** Carbon steel (SM45C) | | | 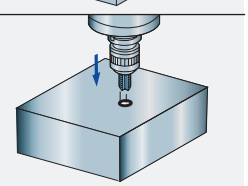 |
| Tool | Spindle speed (r/min) | Feedrate (mm/min(ipm)) | |
| M30 x P3.5 | 212 | 742(29.2) | |

* The results, indicated in this catalogue are provides as example. They may not be obtained due to differences in cutting conditions and environmental conditions during measurement.

### Machining Accuracy

**Roundness**

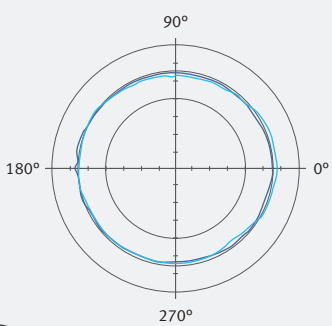


**6.0 µm**

| | |
|---|---|
| **Model** | VC430 / 510 |
| **Material** | A7075F |
| **Tool** | Endmill ø12mm (4 blades) |

**Roughness**

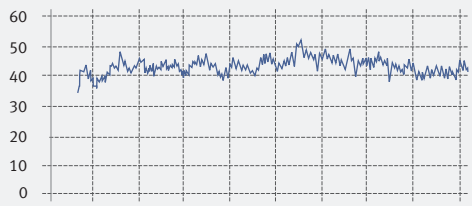


**Ra 0.2 µm**

| | |
|---|---|
| **Spindle speed** | 10000 r/min |
| **Feedrate** | 1500 mm/min(59.1 ipm) |

* The results, indicated in this catalogue are provides as example. They may not be obtained due to differences in cutting conditions and environmental conditions during measurement.

## Standard/Optional Specifications

Diverse optional features are available to meet specific customer requirements.

● Standard ○ Optional X N/A

| NO. | Description | Features | VC 430 | VC 510 |
|---|---|---|---|---|
| 1 | Air blower | | ○ | ○ |
| 2 | Air gun | | ○ | ○ |
| 3 | Auto tool changer | 30 Tools | ● | ● |
| 4 | | 40 Tools | ○ | ○ |
| 5 | Coolant chiller | | ○ | ○ |
| 6 | Coolant gun | | ○ | ○ |
| 7 | Coolant tank | | ● | ● |
| 8 | Coolant level switch : Sensing level - Low / High | | ○ | ○ |
| 9 | Data server | NONE | ● | ● |
| 10 | | FUNCTION & MEMORY CARD_1GB | ○ | ○ |
| 11 | Electric cabinet air conditioner | | ○ | ○ |
| 12 | Electric cabinet light | | ○ | ○ |
| 13 | Electric cabinet line filter | | ○ | ○ |
| 14 | Hydraulic fixture interface | NONE | ● | ● |
| 15 | | A LINE_1 PAIR_EACH PALLET | ○ | ○ |
| 16 | MPG | 1 MPG_PORTABLE TYPE | ● | ● |
| 17 | | 1 MPG_PORTABLE_W/ENABLE TYPE | ○ | ○ |
| 18 | NC system | DOOSAN FANUC i | ● | ● |
| 19 | NC system lcd size | 8.4 inch (Color) | ● | ● |
| 20 | | 10.4 inch (Color) | ○ | ○ |
| 21 | Oil cooler | 6000 r/min | X | X |
| 22 | | 10000 r/min | ● | ● |
| 23 | | 12000 r/min | ● | ● |
| 24 | Oil Skimmer | Belt type | ○ | ○ |
| 25 | Pallet type | 2_30-M16 X P2.0 TAP | ● | X |
| 26 | | 2_4-100 X 18H8 T-SLOTS | ○ | X |
| 27 | | 2_42-M16 X P2.0 TAP | X | ● |
| 28 | | 2_5-100 X 18H8 T-SLOTS | X | ○ |
| 29 | Pneumatic fixture interface | P/T LINE_1 PAIR_EACH PALLET | ● | ● |
| 30 | | A/B LINE_1 PAIR_EACH PALLET | ○ | ○ |
| 31 | Power transformer | | ○ | ○ |
| 32 | Rigid tapping | | ● | ● |
| 33 | Shower coolant | NONE | ● | ● |
| 34 | | 1.1 kW_0.1MPA_200L/MIN_220V | ○ | ○ |
| 35 | Spindle motor power | 15/11 kW | X | ○ |
| 36 | | 18.5/15 kW | ● | ● |
| 37 | Spindle speed | 6000 r/min | X | ○ |
| 38 | | 10000 r/min | ● | ● |
| 39 | | 12000 r/min | ○ | ○ |
| 40 | Test bar | | ○ | ○ |
| 41 | Through spindle coolant | NONE | ● | ● |
| 42 | | 1.5 KW_2.0 MPA | ○ | ○ |
| 43 | | 4.0 KW_2.0 MPA | ○ | ○ |
| 44 | | 5.5 KW_7.0 MPA_DUAL BAG FILTER | ○ | ○ |
| 45 | Work & tool counter | WORK / TOOL | ○ | ○ |
| 46 | Customized Special Option | COOLANT SYSTEM - HIGH PRESSURE TSC1 | ○ | ○ |
| 47 | | APPLY GREASE LUBRICATION | ○ | ○ |

※ Please contact DOOSAN to select detailed steady rest specifications.

## Optional Equipments

### Through-spindle coolant spray system

option

Coolant supply around the spindle nose is standard equipment. The coolant tank is separated from the machine structure to prevent heat transfer. Through spindle coolant (TSC) is an option.

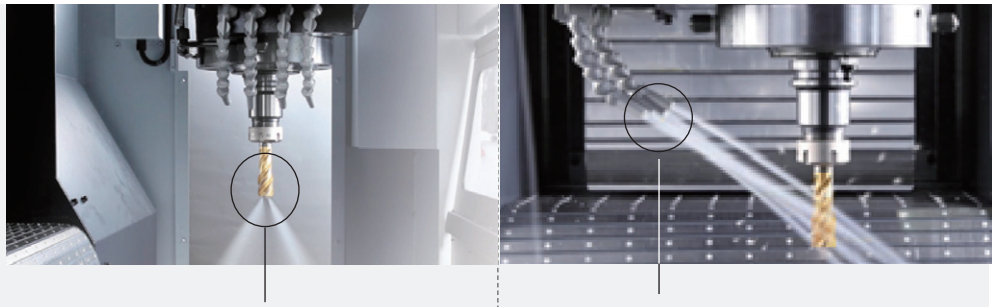

Through Spindle Coolant

Flood Coolant

### Coolant Chiller (strongly recommended) option

Heat is transferred from the coolant during cutting to the machine structure and can cause thermal deformation. To maintain optimum machining accuracy, a coolant chiller is recommended which recirculates the coolant and controls its temperature. This significantly improves overall precision.

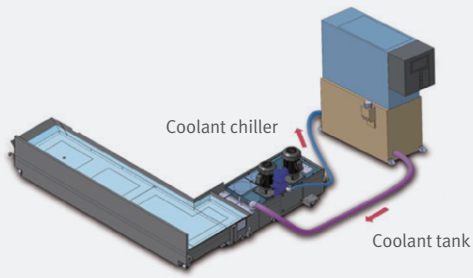


### AWC system option

The optimized solution to realize compact automation system through automatic work-piece change system.

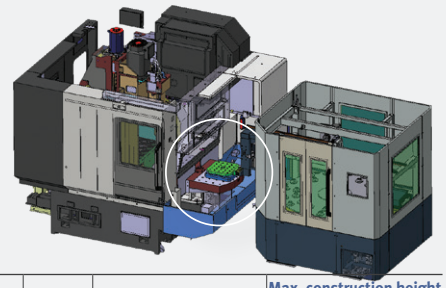

| Max. workpiece dimensions | Unit | Count | Max. loading | Max. construction height on the pallet |
|---|---|---|---|---|
| 250 x 250 (9.8x9.8) or ø 300 (11.8) | mm (inch) | 12 | 130kg (286.6lb) | 350mm (13.8inch) |
| 320 x 320 (12.6x12.6) or ø 360 (14.2) | mm (inch) | 10 | 250kg (551.1lb) | |
| 350 x 350 (13.8x13.8) or ø 400 (15.7) | mm (inch) | 8 | | |
| 400 x 400 (15.7x15.7) or ø 450 (17.7) | mm (inch) | 6 | | |
| 500 x 500 (19.7x19.7) or ø 550 (21.7) | mm (inch) | 4 | | |

### Pallet Storage–Table Configuration

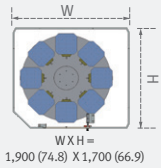


W X H =
1,900 (74.8) X 1,700 (66.9)

Unit : mm (inch)

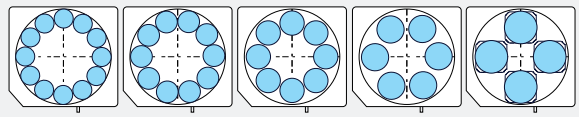

250 (9.8) X 250 (9.8) | 320 (12.6) X 320 (12.6) | 350 (13.8) X 350 (13.8) | 400 (15.7) X 400 (15.7) | 500 (19.7) X 500 (19.7)

### Interface for Additional Equipment (4 Axes)

#### Fixure check list(for hydraulic / pneumatic Fixures)

- Pressure source
  Hydraulic ☐ P/T ☐ A/B
  Pneumatic ☐ P/T ☐ A/B
- Hydraulic power unit
  Supply scope : ☐ User ☐ DOOSAN
  ☐ Use Doosan standard unit 24L / min, 4.9 MPa
  ☐ Special requirement _____ L / min, _____MPa
- Number of ports_Each Pallet
  ☐ 1pair(2-pt1/4" port)_each pallet
  ☐ 2pair(4-pt1/4" port)_each pallet
  ☐ 3pair(6-pt1/4" port)_each pallet

350 (13.8) X 350 (13.8) 400 (15.7) X 400 (15.7) 500 (19.7) X 500 (19.7)

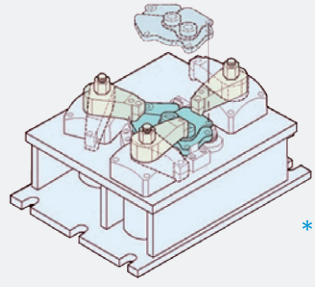

* Contact Doosan for more information

#### Hydraulic fixture line

Pneumatic or hydraulic lines supply power from a central power pack to fixtures on each side of the indexing pallet via the center of the table. Various numbers of supply lines and operating pressures are available.

Recommended Rotary Table Size
VC 430 : Ø170mm (Ø6.7 inch) /
VC 510 : Ø200mm (Ø7.9 inch)

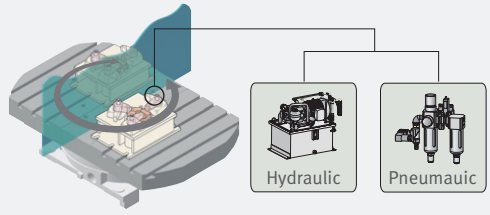

## DOOSAN Fanuc i Plus

DOOSAN Fanuc i Plus is optimized for maximizing customer productivity and convenience.

### 15 inch screen + New OP

DOOSAN Fanuc i Plus' operation panel enhances operating convenience by incorporating common-design buttons and layout, and features the Qwerty keyboard for fast and easy operation.

**DOOSAN Fanuc i Plus**
- 15 inch color display
  Intuitive and user-friendly design

**USB & PCMCIA card**
**QWERTY keyboard**
- EZ-guide i standard
- Ergonimic operator panel
- 2MB Memory
- Hot key

**1.**
**MPG handle**

**2.**
**Tool magazine button**

Magazine : CW
Magazine : CCW

**3.**
**PCMCIA Card & USB Port**

**PCMCIA Card**
The PCMCIA card enables uploading and downloading of the NC program, NC parameters, tool information, and ladder programs, and also supports DNC operation.

**USB Port**
The USB memory stick enables uploading and downloading of the NC program, NC parameters, tool information and ladder programs. (DNC operation is not supported.)

**4.**
**Swiveling operation panel**
The operation panel is capable of swiveling by 90 degrees to enhance convenience.

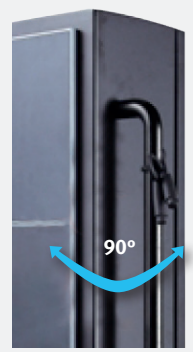

## Spindle Power – Torque Curve

# VC 430 / VC 510

### High speed spindle

Max. spindle speed : 10000 r/min
Spindle motor power : 18.5 / 15 kW (24.8 / 20.1 Hp)

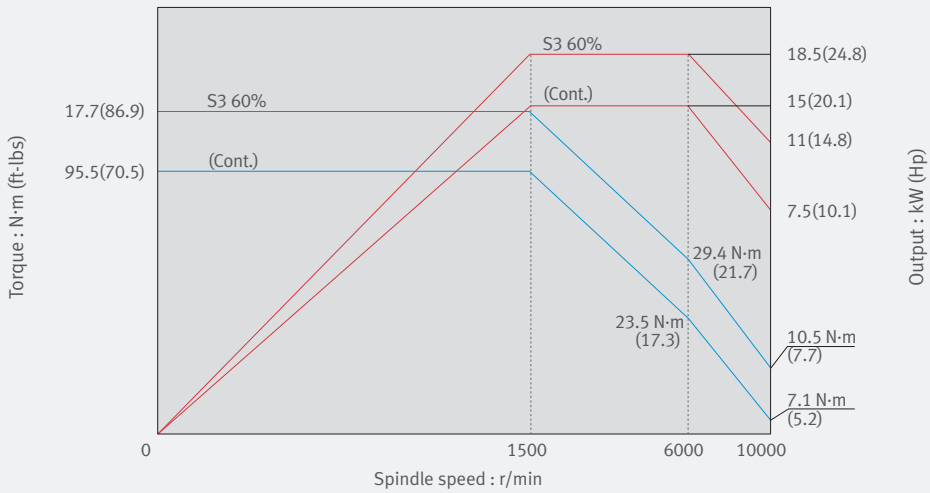


Max. spindle speed : 12000 r/min
Spindle motor power : 18.5 / 15 kW (24.8 / 20.1 Hp) option

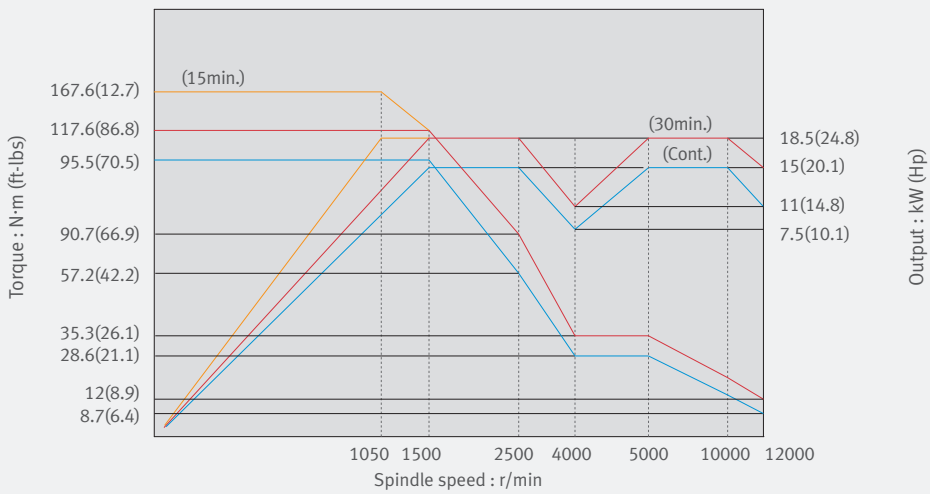


### High torque spindle

Max. spindle speed : 6000 r/min
Spindle motor power : 15 / 11kW (20.1 / 14.8 Hp) option
(Only VC 510)

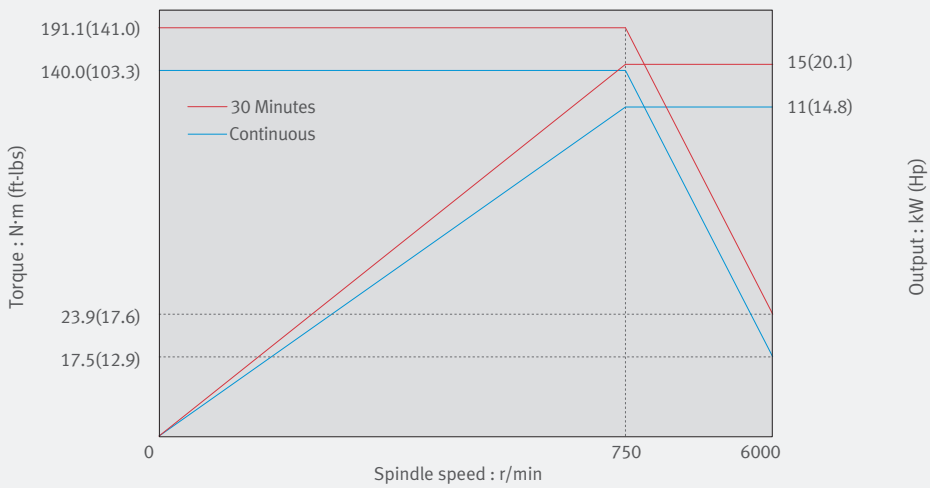

## External Dimensions

# VC 430 / VC 510

Unit : mm (inch)

Top view

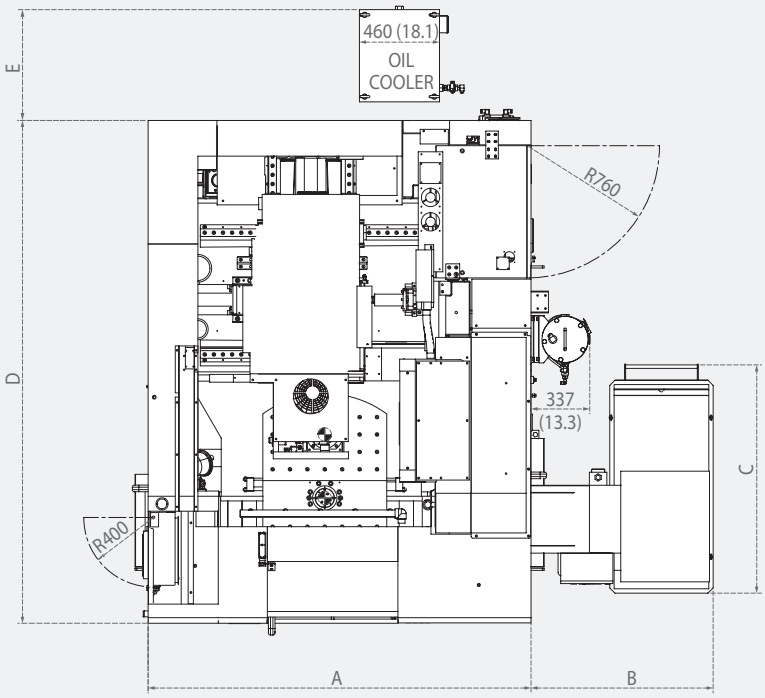


Front View

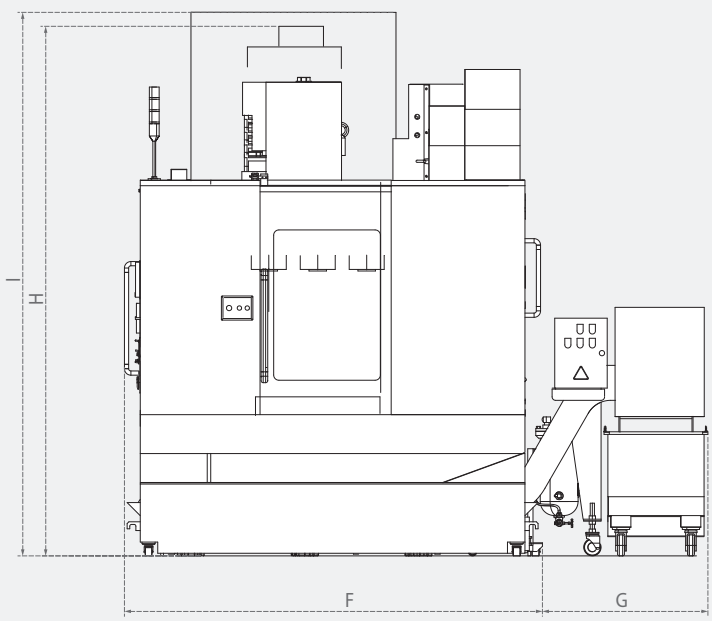


| Item | Unit | A | B | C | D | E | F | G | H | | I |
|---|---|---|---|---|---|---|---|---|---|---|---|
| | | | | | | | | | Belt type | Direct type | With top cover |
| **VC 430** | mm (inch) | 2200 (86.6) | 1046 (41.2) | 1312 (51.7) | 2890 (113.8) | 637 (25.1) | 2391 (94.1) | 946 (37.2) | 2738 (107.8) | 3030 (119.3) | 3110 (122.4) |
| **VC 510** | | 2580 (101.6) | 1100 (43.3) | | 3260 (128.3) | 590 (23.2) | 2580 (101.6) | 1100 (43.3) | 2830 (111.4) | 3130 (123.2) | 3250 (128.0) |

* Some peripheral equipment can be placed in other places

# Tool shank

BT

Unit : mm (inch)

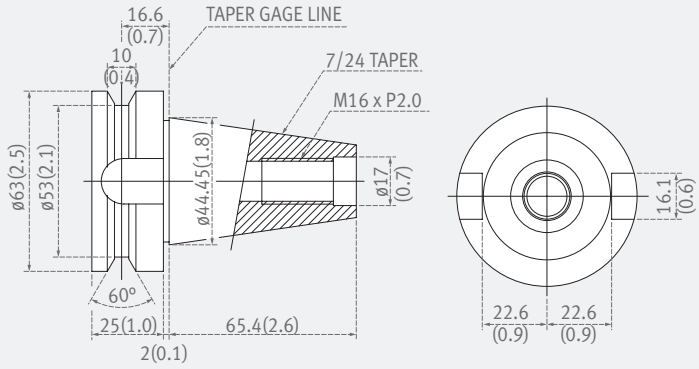


MAS403 BT 40

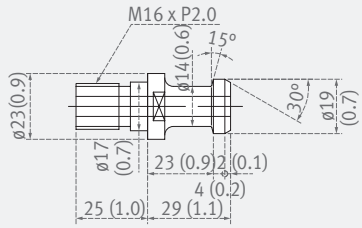


NiKKEN PS-806
(with TSC)

CAT option

Unit : mm (inch)

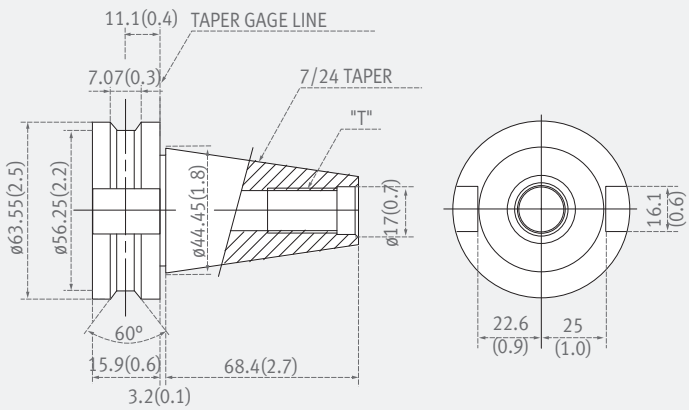


CAT 40

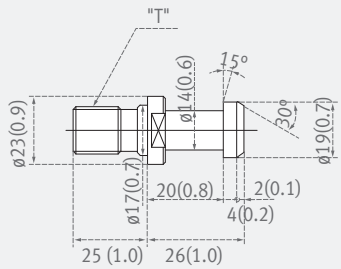


DIN 69872#40
(with TSC)

DIN option

Unit : mm (inch)

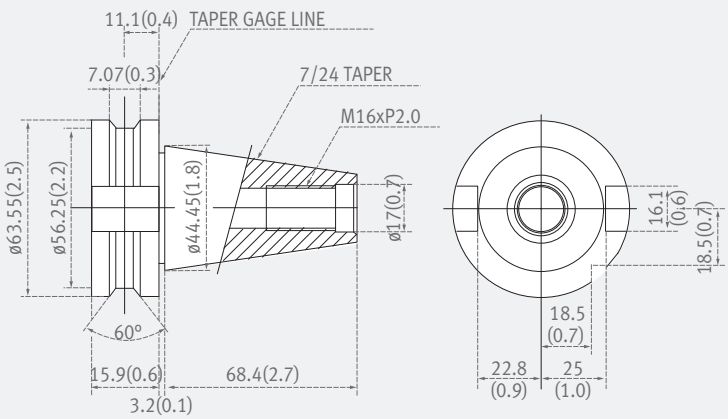


DIN 69871-A40

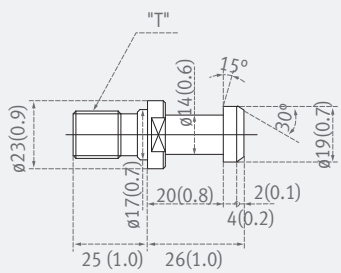


DIN 69872#40
(with TSC)

# Pallet dimension

## Pallet

VC 430

Unit : mm (inch)

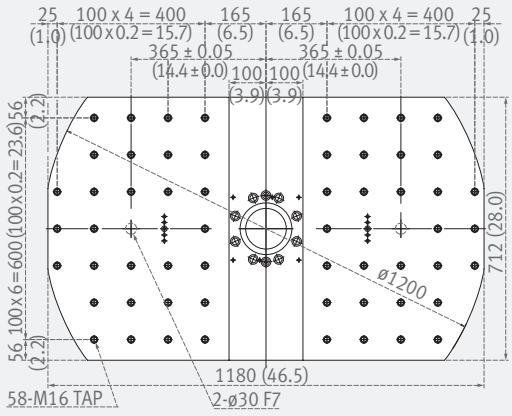


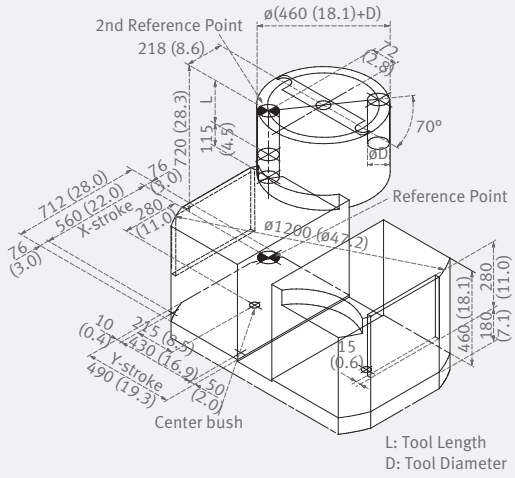


* If the size of the workpiece is larger than the indicated limit, it may collide with the column, ATC, splash guard, etc.

VC 510

Unit : mm (inch)

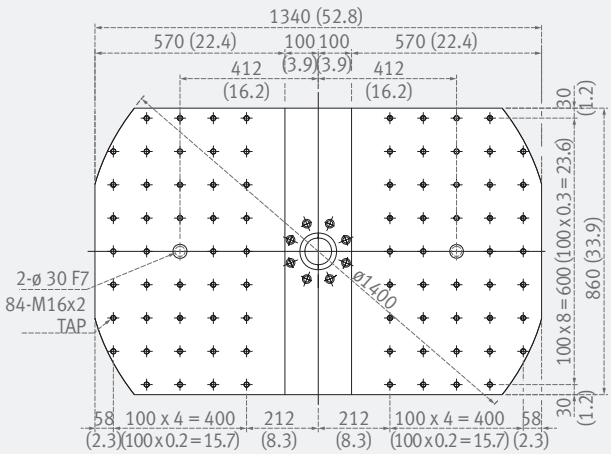


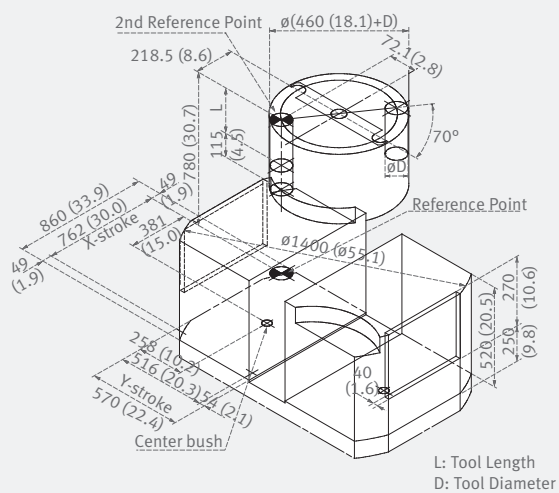


* If the size of the workpiece is larger than the indicated limit, it may collide with the column, ATC, splash guard, etc.

## Machine Specifications

**VC 430 / VC 510**

| Features | | Unit | VC 430 | VC 510 |
|---|---|---|---|---|
| Travels | X-axis | mm (inch) | 560 (22.0) | 762 (30.0) |
| | Y-axis | mm (inch) | 430 (16.9) | 516 (20.3) |
| | Z-axis | mm (inch) | 570 (22.4) | |
| | Distance from spindle nose to table top | mm (inch) | 150 (5.9) ~ 720 (28.3) | 210 (8.3) ~ 780 (30.7) |
| | Distance from spindle center to column guideway | mm (inch) | 495 (19.5) | 530 (20.9) |
| Travels | X-axis | mm (inch) | 560 (22.0) | 762 (30.0) |
| | Y-axis | mm (inch) | 430 (16.9) | 516 (20.3) |
| | Z-axis | mm (inch) | 570 (22.4) | |
| | Distance from spindle nose to table top | mm (inch) | 150 (5.9) ~ 720 (28.3) | 210 (8.3) ~ 780 (30.7) |
| | Distance from spindle center to column guideway | mm (inch) | 495 (19.5) | 530 (20.9) |
| Feedrate | Rapid traverse rate (X / Y / Z) | m/min (ipm) | 40 / 40 / 36 (1574.8 / 1574.8 / 1417.3) | 40 / 40 / 32 (1574.8 / 1574.8 / 1259.8) |
| | Cutting feedrate | mm/min (ipm) | 18000 (708.7) | 16000 (629.9) |
| Pallet | Pallet size | mm(inch) | 2-712 x 490 (2-28.0 x 19.3) | 2-860 x 570 (2-33.9 x 22.4 inch) |
| | Pallet loading capacity | kg (lb) | 2-300 (2-661.4) | 2-350 (2-771.6) |
| | Max. workpiece height | mm (inch) | 460(1)(18.1) | 520(1)(20.5) |
| | Pallet surface | - | 2-29-M16 x P2.0 | 42-M16 x P2.0 Taper |
| Spindle | Max. spindle speed | r/min | 10000 {12000, 14000}* | 10000 {6000, 12000}* |
| | Spindle taper | - | ISO #40 7/24 Taper | |
| | Max. spindle torque | N·m(ft-lbs) | 117.7 {167.6}* (86.9 {123.7}) | 117.7 {191.1, 167.6}*(86.9 {141.0, 123.7 }) |
| Automatic tool changer | Type of tool shank | - | MAS403 BT40 | |
| | Tool storage capacity | ea | 30 {40}* | |
| | Max. tool diameter (without adjacent tools) | mm (inch) | 80 {76}* (125) (3.1 {3.0} (4.9)) | |
| | Max. tool length | mm (inch) | 220(2) (8.7) / 300(3) (11.8) | |
| | Max. tool weight | mm (inch) | 8 (0.3) | |
| | Max. tool moment | N·m(ft-lbs) | 5.88 (4.3) | |
| | Tool change time (tool-to-tool) | s | 60Hz {50Hz}* : 1.3 {1.6}* | |
| | Tool change time (chip-to-chip) | s | | |
| Automatic pallet changer | Number of pallet | ea | 2 | |
| | Pallet change time | s | 5 | 5.5 |
| Motor | Spindle motor | kW (Hp) | 18.5 / 15 (24.8 / 20.1) | 18.5 / 15 (24.8 / 20.1) (10000, 12000 r/min) 15 / 11(20.1 / 14.8) (6000 r/min) |
| | Feed motor (X / Y / Z) | kW (Hp) | 4.0 / 4.0 / 4.0 (5.4 / 5.4 / 5.4) | |
| Power source | Electric power supply (rated capacity) | kVA | 40.2 (10000 r/min) 35.1 (12000 r/min) | 39.4 (6000 r/min) 40.2 (10000 r/min) 35.1 (12000 r/min) |
| | Compressed air supply | MPa | 0.54 | |
| Tank capacity | Coolant tank capacity | L (galon) | 300 (79.3) | 420 (111.0) |
| | Lubrication tank capacity (available) | L (galon) | 2 (0.5) | |
| Machine Dimensions | Height | mm (inch) | 3030 (119.3) | 3130 (123.2) |
| | Length | mm (inch) | 2890 (113.8) | 3260 (128.3) |
| | Width | mm (inch) | 2200 (86.6) | 3130 (123.2) |
| | Weight | kg (lb) | 7800 (17195.8) | 9200 (20282.2) |
| Control | NC system | | DOOSAN Fanuc i Plus, HEIDENHAIN TNC 620 NC | |

* { } : Optional

(1) This value is the maximum for the height of rectangular without interference of ATC operating.

(2) Available with pallet change.

(3) Avaliable in tool magazine.

## NC Unit Specifications

# FANUC

● Standard ○ Optional X N/A

| Item | | Spec. | DOOSAN Fanuc i Plus |
|---|---|---|---|
| AXES CONTROL | Controlled axes | 3 (X,Y,Z) | X, Y, Z |
| | Additional controlled axes | 5 axes in total | ○ |
| | Least command increment | 0.001 mm / 0.0001" | ● |
| | Least input increment | 0.001 mm / 0.0001" | ● |
| | Interpolation type pitch error compensation | | ● |
| INTERPOLATION & FEED FUNCTION | 2nd reference point return | G30 | ● |
| | 3rd / 4th reference return | | ● |
| | Inverse time feed | | ● |
| | Cylinderical interpolation | G07.1 | ● |
| | Helical interpolation B | Only Fanuc 30i | X |
| | Smooth interpolation | | X |
| | NURBS interpolation | | X |
| | Involute interpolation | | X |
| | Helical involute interpolation | | X |
| | Bell-type acceleration/deceleration before look ahead interpolation | | ● |
| | Smooth backlash compensation | | ○ |
| | Automatic corner override | G62 | ● |
| | Manual handle feed | Max. 3unit | 1 unit |
| | Manual handle feed rate | x1, x10, x100 (per pulse) | ● |
| | Handle interruption | | ○ |
| | Manual handle retrace | | ○ |
| | Manual handle feed 2/3 unit | | X |
| | Nano smoothing | AI contour control II is required. | ○ |
| | AI APC | 20 BLOCK | X |
| | AICC I | 30 BLOCK | X |
| | AICC I | 40 BLOCK | X |
| | AICC II | 200 BLOCK | ● |
| | AICC II | 400 BLOCK | ○*1) |
| | High-speed processing | 600 BLOCK | X |
| | Look-ahead blocks expansion | 1000 BLOCK | X |
| | DSQ I | AICC II (200block) + Machining condition selection function | X |
| | DSQ II | AICC II (200block) + Machining condition selection function + Data server(1GB) | X |
| | DSQ III | AICC II with high speed processing (600block) + Machining condition selection function + Data server(1GB) | X |
| | Fine Surface Machining | Look-ahead block no. is Max. 200<br>- AI contour control II+<br>- Smooth tolerance control+<br>- Jerk control | ● |
| SPINDLE & M-CODE FUNCTION | M- code function | | ● |
| | Retraction for rigid tapping | | ● |
| | Rigid tapping | G84, G74 | ● |
| TOOL FUNCTION | Number of tool offsets | 64 ea | X |
| | Number of tool offsets | 99 ea | X |
| | Number of tool offsets | 200 ea | X |
| | Number of tool offsets | 400 ea | 400 ea |
| | Number of tool offsets | 499 / 999 / 2000 ea | X |
| | Tool nose radius compensation | G40, G41, G42 | ● |
| | Tool length compensation | G43, G44, G49 | ● |
| | Tool life management | | ● |
| | Addition of tool pairs for tool life management | | ● |
| | Tool offset | G45 - G48 | ● |

● Standard ○ Optional X N/A

| Item | | Spec. | DOOSAN Fanuc i Plus |
|---|---|---|---|
| PROGRAMMING & EDITING FUNCTION | Custom macro | | ● |
| | Macro executor | | ○ |
| | Extended part program editing | | ● |
| | Part program storage | 256KB (640m) | X |
| | Part program storage | 512KB (1,280m) | X |
| | Part program storage | 1MB (2,560m) | X |
| | Part program storage | 2MB (5,120m) | 5,120m |
| | Part program storage | 4MB (1,0240m) | X |
| | Part program storage | 8MB (2,0480m) | X |
| | Inch/metric conversion | G20 / G21 | ● |
| | Number of Registered programs | 400 ea | X |
| | Number of Registered programs | 500 ea | X |
| | Number of Registered programs | 1000 ea | 1000 ea |
| | Number of Registered programs | 4000 ea | X |
| | Optional block skip | 9 BLOCK | ● |
| | Optional stop | M01 | ● |
| | Program file name | 32 characters | X |
| | Program number | O4-digits | ● |
| | Playback function | | ● |
| | Addition of workpiece coordinate system | G54.1 P1 - 48 (48 pairs) | 48 pairs |
| | Addition of workpiece coordinate system | G54.1 P1 - 300 (300 pairs) | X |
| | Tilted working plane indexing command | G68.2 | ○ |
| | Tilted working plane indexing function | Programming TWP command on guidance window | ○ |
| OTHERS FUNCTIONS (Operation, setting & Display, etc) | Embeded Ethernet | | ● |
| | Graphic display | Tool path drawing | ● |
| | Loadmeter display | | ● |
| | MDI / DISPLAY unit | 15" color LCD | ● |
| | | 15" color LCD | X |
| | | 15" color LCD with Touch Panel | X |
| | Memory card interface | | ● |
| | USB memory interface | Only Data Read & Write | ● |
| | Operation history display | | ● |
| | DNC operation with memory card | | ● |
| | Optional angle chamfering / corner R | | ● |
| | Run hour and part number display | | ● |
| | High speed skip function | | ○ |
| | Polar coordinate command | G15 / G16 | ● |
| | Polar coordinate interpolation | G12.1 / G13.1 | X |
| | Programmable mirror image | G50.1 / G51.1 | ● |
| | Scaling | G50, G51 | ● |
| | Single direction positioning | G60 | ● |
| | Pattern data input | | ● |
| | Jerk control | AI contour control II is required. | ○ |
| | Fast Data server with1GB PCMCIA card | | ○ |
| | Fast Ethernet | | ○ |
| | 3-dimensional coordinate conversion | | X |
| | 3-dimensional tool compensation | | X |
| | Figure copying | G72.1, G72.2 | X |
| | Machining time stamp function | | X |
| | Machine alarm diagnosis | | ● |
| | CNC screen display | | ● |
| | CNC screen dual display function | | ● |
| | One touch macro call | | ○ |
| | Machining condition selection function | 10 LEVELS | ●*2) |
| | Machining quality level adjustment | 3 LEVELS | ○*2) |
| | EZ Guide i (Conversational Programming Solution) | | ● |
| | iHMI with Machining Cycle | | X |
| | MANUAL GUIDE i | | X |

*1) AICC2 (400block) of 0iMF must be changed to High Speed Main board. Ask R&D center for information.
*2) If This funtion is selected, Step of Machining condition selection function is changed from 10 levels to 3 levels.

# CNC Specifications

HEIDENHAIN

● Standard ○ Optional X N/A

| No. | Division | Item | Spec. | TNC 620 |
|---|---|---|---|---|
| 1 | Axes control | Controlled axes | 3 axes | X, Y, Z |
| 2 | | | 4 axes | ○ |
| 3 | | Simultaneously controlled axes | Controlled axes | ● |
| 4 | | Controlled axes | Max. 18 axes in total | OPT(Max. 6axes) |
| 5 | | Least command increment | 0.0001 mm (0.0001 inch), 0.0001° | ● |
| 6 | | Least input increment | 0.0001 mm (0.0001 inch), 0.0001° | ● |
| 7 | | Axis feedback control | Double-speed control loops for high-frequency spindles and torque/linear motors | ○ |
| 8 | | MDI / DISPLAY unit | 15.1 inch TFT color flat panel | ● |
| 9 | Configuration | Machine parameters | Tree structure with symbolic names of the parameters | ● |
| 10 | | | Tabular representation | ● |
| 11 | Commissioning and diagnostics | Integrated oscilloscope | | ● |
| 12 | | OnLine monitor (OLM) | | ● |
| 13 | | BUS diagnostics | | ● |
| 14 | | DriveDiag | | ● |
| 15 | | ApiData function | | ● |
| 16 | | Trace function | | ● |
| 17 | | Table function | | ● |
| 18 | | Logic diagram | | ● |
| 19 | | I/O-Force List | | ● |
| 20 | | Log | | ● |
| 21 | | Machine operating panel | TE 735 | ● |
| 22 | | Electronic handwheels | HR 510 | ● |
| 23 | | Data interfaces | Ethernet interface | ● |
| 24 | | | USB interface (USB 2.0) | ● |
| 25 | | Feedrate override | 0 - 150 % (10% unit) | ● |
| 26 | | Spindle orientation | | ● |
| 27 | | Spindle speed command | S5 digits | ● |
| 28 | | Spindle speed override | 10 - 150 % | ● |
| 29 | | Monitoring functions | Position monitoring | ● |
| 30 | | | Movement monitoring | ● |
| 31 | | | Standstill monitoring | ● |
| 32 | | | Positioning window | ● |
| 33 | | | Temperature monitoring | ● |
| 34 | | Gantry axes and master-slave torque control | | ○ |
| 35 | | | Max. 5000 blocks. | ● |
| 36 | | HSC filters | | ● |
| 37 | | Switching the traverse ranges | | ● |
| 38 | | C-axis operation | Spindle motor drives the rotary axis | ● |
| 39 | User functions | program input | With smartSelect | ● |
| 40 | | Position entry | Nominal positions for lines and arcs in Cartesian coordinates | ● |
| 41 | | | Incremental or absolute dimensions | ● |
| 42 | | | Display and entry in mm or inches | ● |
| 43 | | | Display of the handwheel path during machining with handwheel superimpositioning | ● |
| 44 | | | Paraxial positioning blocks | ● |
| 45 | | Tool compensation | In the working plane and tool length | ● |
| 46 | | | Radius-compensated contour lookahead for up to 99 blocks (M120) | ○ |
| 47 | | | Three-dimensional tool radius compensation | ○ |
| 48 | | Tool table | Central storage of tool data | ● |
| 49 | | | Multiple tool tables with any number of tools | ● |
| 50 | | Cutting data calculator | Calculation of spindle speed and | ● |
| 51 | | Constant contouring speed | relative to the path of the tool center or to the tool's cutting edge | ● |
| 52 | | Parallel operation | Creation of a program while another program is being run | ● |
| 53 | | MDI mode | | ● |
| 54 | | Tilting the working plane with Cycle 19 | | ○ |
| 55 | | Tilting the working plane with the PLANE function | | ○ |
| 56 | | Manual traverse in tool-axis direction | after interruption of program run | ● |
| 57 | | Function TCPM | Retaining the position of tool tip when positioning tilting axes | ○ |
| 58 | | Rotary table machining | Programming of cylindrical contours as if in two axes | ○ |
| 59 | | | Feed rate in distance per minute | ○ |
| 60 | | FK free contour programming | for workpieces not dimensioned for NC programming | ● |
| 61 | | Program jumps | Subprograms and program section repeats | ● |
| 62 | | | Calling any program as a subprogram | ● |
| 63 | | New 3-D simulation graphics in full detai | | ● |
| 64 | | Program verification graphics | Plan view, view in three planes, 3-D view | ● |
| 65 | | | 3-D line graphics | ● |
| 66 | | Programming graphics | 2-D line graphics | ● |
| 67 | | Program-run graphics | (plan view, view in three planes,3-D view) | ● |
| 68 | | Calculator | | ● |
| 69 | | Entry of text and special characters | | ● |
| 70 | | Comment blocks in NC program | | ● |
| 71 | | "Save As" function | | ● |
| 72 | | Structure blocks in NC program | | ● |
| 73 | | Entry of feed rates | FU (feed per revolution) | ● |
| 74 | | | FZ (tooth feed per revolution) | ● |
| 75 | | Processing DXF data | | ○ |
| 76 | | KinematicsOpt | Automatic measurement and optimization of machine kinematics | ○ |
| 77 | | KinematicsComp | Three-dimensional compensation | ○ |
| 78 | Touch probe cycles | Calibrating the effective radius on a circular stud | | ● |
| 79 | | Calibrating the effective radius on a sphere | | ● |
| 80 | Cycles for automatic workpiece inspection | Save kinematics | | ○ |
| 81 | | Measure kinematics | | ○ |
| 82 | | Preset compensation | | ○ |
| 83 | | TS calibration of length | | ● |
| 84 | | TS calibration in a ring | | ● |
| 85 | | TS calibration on stud | | ● |
| 86 | Options | Software option 1 | | ○ |
| 87 | | Software option 2 | | ○ |
| 88 | | Python OEM Process | Execute Python applications | ○ |

# Responding to Customers
# Anytime, Anywhere

**Doosan Machine Tools' Global Network, Responding to Customer's Needs nearby, Anytime, Anywhere**

Doosan machine tools provides a system-based professional support service before and after the machine tool sale by responding quickly and efficiently to customers' demands. By supplying spare parts, product training, field service and technical support, we can provide top class support to our customers around the world.

**Global Sales and Service Support Network**

| Corporations | Dealer Networks | Technical Centers | Service Post | Factories |
|---|---|---|---|---|
| 4 | 167 | 51 | 200 | 3 |

Sales Support, Service Support, Parts Support

## Customer Support Service

We help customers to achieve success by providing a variety of professional services from pre-sales consultancy to post-sales support.

### Supplying Parts

- Supplying a wide range of original Doosan spare parts
- Parts repair service

### Field Services

- On site service
- Machine installation and testing
- Scheduled preventive maintenance
- Machine repair

### Technical Support

- Supports machining methods and technology
- Responds to technical queries
- Provides technical consultancy

### Training

- Programming / machine setup and operation
- Electrical and mechanical maintenance
- Applications engineering

# Doosan Machine Tools

doosanmachinetools.com


***Head Office***
22F T Tower, 30, Sowol-ro 2-gil
Jung-gu, Seoul, Korea, 04637
**Tel** +82-2-6972-0370/0350
**Fax** +82-2-6972-0400

***Doosan Machine Tools America***
19A Chapin Road, Pine Brook
New Jersey 07058, United States
**Tel:** +1-973-618-2500
**Fax:** +1-973-618-2501

***Doosan Machine Tools Europe***
Emdener Strasse 24, D-41540
Dormagen, Germany
**Tel:** +49-2133-5067-100
**Fax:** +49-2133-5067-111

***Doosan Machine Tools India***
No.82, Jakkuar Village
Yelahanka Hobil, Bangalore-560064
**Tel:** + 91-80-2205-6900
**E-mail:** india@doosanmt.com

***Doosan Machine Tools China***
Room 101,201,301, Building 39 Xinzhuan
Highway No.258 Songjiang District
China Shanghai (201612)
**Tel:** +86 21-5445-1155
**Fax:** +86 21-6405-1472

***Sales inquiry***
sales@doosanmt.com


*For more details, please contact Doosan Machine Tools.

*The specifications and information above-mentioned may be changed without prior notice.


*Doosan Machine Tools Co., Ltd. is a subsidiary of MBK Partners. The trademark DOOSAN is used under a licensing agreement with Doosan Corporation, the registered trademark holder.


**Fire Safety Precautions** | There is a high risk or fire when using non-water-soluble cutting fluids, processing flammable materials, neglecting use coolants and modifying the machine without the consent of the manufacturer. Please check the SAFETY GUIDANCE carefully before using the machine.


ver. EN 210430 SU

HIGH PRODUCTIVITY VERTICAL MACHINING CENTER
EQUIPPED WITH DUAL PALLET

# VC

## 3600

DN SOLUTIONS

# VC 3600

The VC 3600 is a compact high-productivity Vertical machining center designed for the automotive and IT industries. It is equipped with a simultaneous operation function where rotary table turns and the all axes are positioned simultaneously when tools are changed. Durability and reliability have been further improved by adopting a more rigid frame and a servo unit.

## SERVO-TYPE APC (AUTO PALLET CHANGER) AND ATC (AUTO TOOL CHANGER) AS STANDARD FEATURES TO ACHIEVE EVEN HIGHER PRODUCTIVITY AND RELIABILITY

- Servo-driven APC reduces pallet change time by about 30%. Servo-driven ATC incorporating 20 tools as standard feature reduces tool change time by up to 23%.

## NEWLY-DESIGNED DIRECT COUPLED SPINDLE WITH IMPROVED PRODUCTIVITY AND HEAVY DUTY CUTTING PERFORMANCE

- The spindle design has been optimized by reducing acceleration and deceleration times even higher productivity. Adoption of dual contact spindle as standard feature improves heavy duty machining performance.

## VARIOUS USER CONVENIENCE FEATURES

- Auxiliary chip box (optional) effectively filters fine aluminum chips.

# BASIC STRUCTURE

The VC 3600, a Tool Taper ISO #40 Class Dual Pallet Vertical machining center , is equipped with a highly reliable servo unit and a new frame, and offers superior productivity and reliability.

## High-Rigidity Structure

The machine's structure has been improved and optimized by CAE analysis to enhance rigidity and thereby ensure stable and accurate machining over long periods.

### Travel distance (X / Y / Z)

X-axis
**520** mm 20.5 inch

Y-axis
**360** mm 14.2 inch

Z-axis
**465** mm 18.3 inch

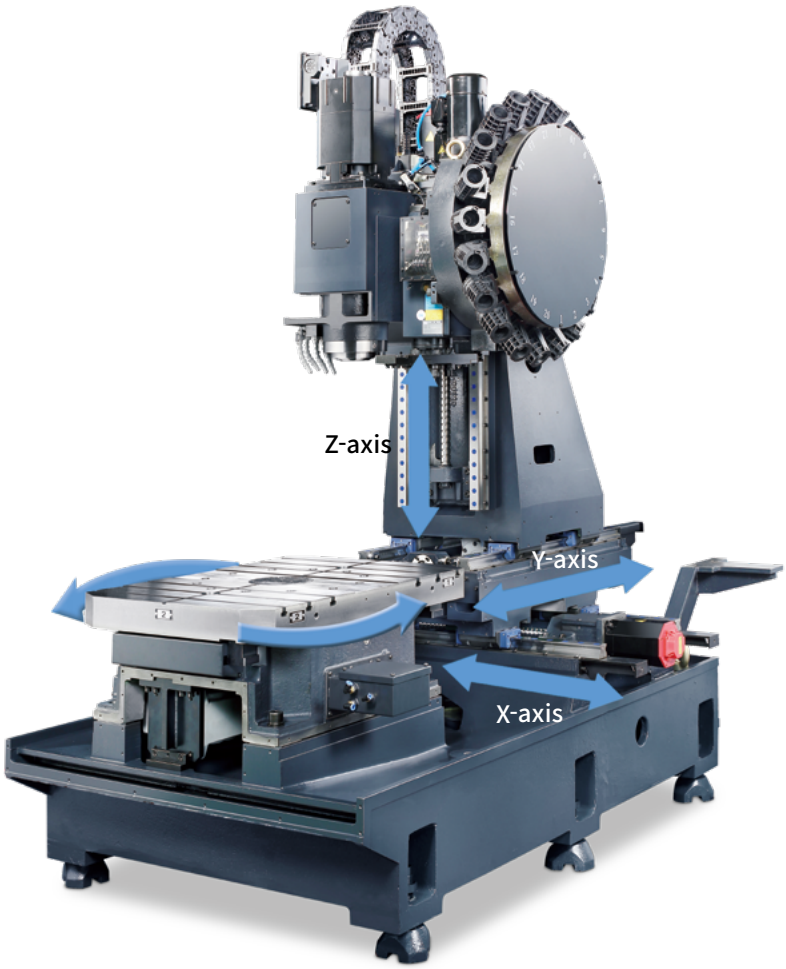


## Axis system

Environmentally friendly grease lubrication is adopted as standard for all of the axis feed system, and roller-type LM guides are provided to enhance the rigidity.

### Rapid traverse rate (X / Y / Z)

**48 / 48 / 48** m/min
1890 / 1890 / 1890 ipm

**Roller-type LM guides are provided as a standard feature**

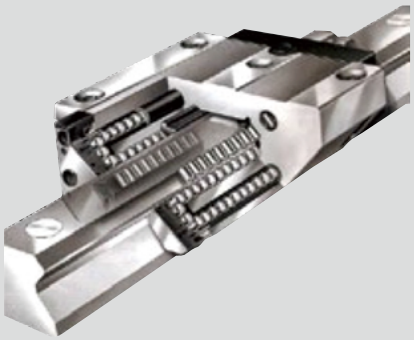

**Grease lubrication system**

The standard grease lubrication system eliminates the need for an oil skimmer and reduces lubrication costs by about 60% compared to oil lubrication.

**Yearly maintenance cost**

Max **60** %

Grease lubrication for all axes is a standard feature

# SPINDLE INFORMATION

To enhance precision and powerful machining capability, direct coupled and dual contact spindle are provided as standard features. Also, spindle maximum power and torque characteristic is upgraded compare to previous model.

### Max. spindle speed

**12000** r/min

### Max. spindle motor power

**18.5** kW 24.8 Hp

### Max. spindle motor torque

**95** N.m 70.1 lbf.ft

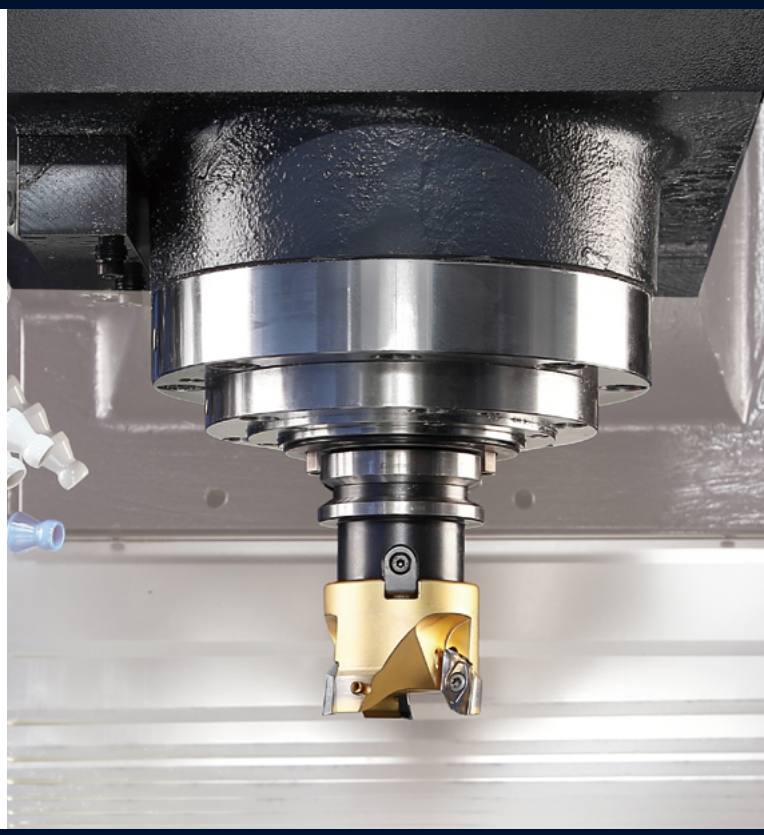

# AUTO PALLET CHANGE SYSTEM (APC)

The servo driven system has been adopted tofurther reduce non cutting time (pallet change time), thereby enhancing productivity and reliability.

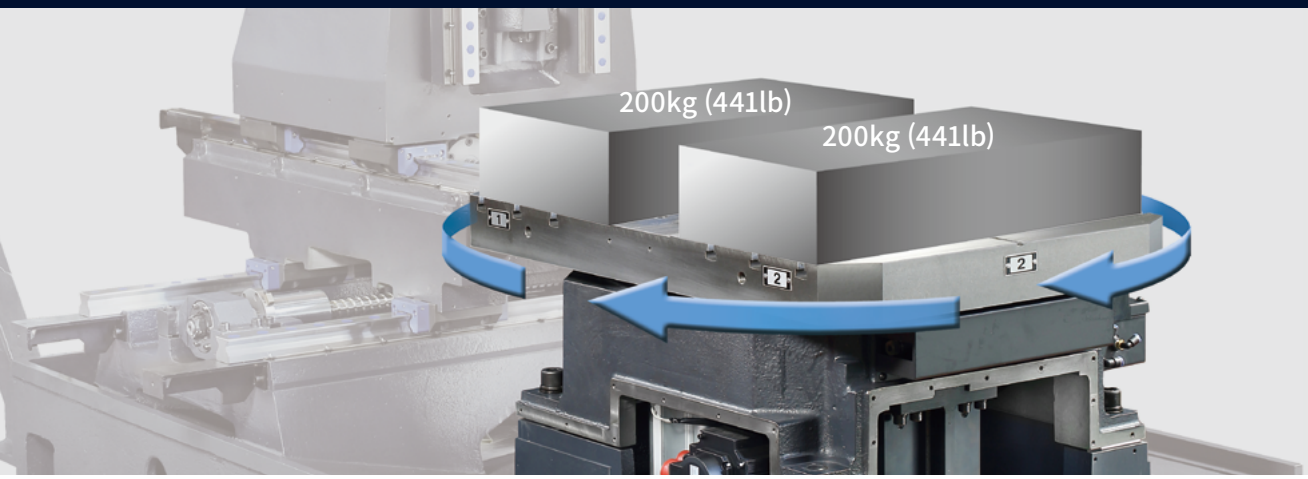


### Table size

**2-650** x **375** mm 2-25.6x14.8 inch

### Max. workpiece weight

**2-200** kg 2-441 lb

### Pallet change time

**2.9** sec (120 kg on 1 pallet)

### Max. workpiece height

**300** mm 11.8 inch

# ATC | CUTTING PERFORMANCE

## ATC (Automatic Tool Changer)

The servo-type ATC improves reliability and reduces idle time.

### Tool storage capacity

**20** ea

### Tool to Tool Time

**1.3** sec

| | |
|---|---|
| Previous models | 1.7 sec. |
| **VC 3600** | 1.3 sec. |

**23** % **Reduced by**

### Chip to Chip* Time

**2.6** sec

| | |
|---|---|
| Previous models | 2.7 sec. |
| **VC 3600** | 2.6 sec. |

**4** % **Reduced by**

** The Chip-to-Chip time was tested in accordance with DN Solutions's strict testing conditions, but may vary depending on the user's operating conditions.*

## Cutting Performance

The high power and torque characteristics of the spindle motor provides superior milling and tapping performance in steel at low rpm, while providing effective high speed machining for aluminum workpieces.
Result of cutting test (12000 r/min, Direct, 18.5/5.5 kW) (24.8/7.4 Hp))

**Face mill (ø80 mm) Carbon steel (SM45C)**

| Chip removal rate ($cm^3$/min ($inch^3$/min)) | Spindle speed (r/min) | Feedrate (mm/min (ipm)) |
|---|---|---|
| 460.8 (28.1) | 1500 | 3600 (141.7) |

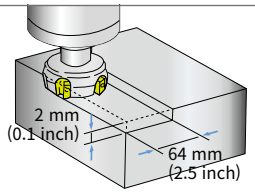


**Face mill (ø80 mm) Aluminium (AL6061)**

| Chip removal rate ($cm^3$/min ($inch^3$/min)) | Spindle speed (r/min) | Feedrate (mm/min (ipm)) |
|---|---|---|
| 1900.8 (116.0) | 1500 | 9900 (389.8) |

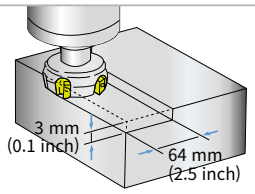


** The results, indicated in this catalogue are provides as example. They may not be obtained due to differences in cutting conditions and environmental conditions during measurement.*

## Productivity

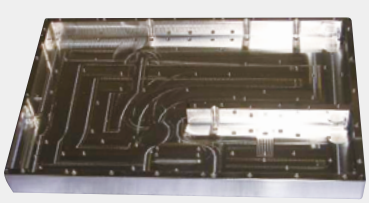

**Sample Work Piece**
**Material: Aluminum (AL6061)**

| | |
|---|---|
| Previous models | 479 sec. |
| **VC 3600** | 402 sec. |

**16** % **Reduced by**

# STANDARD | OPTIONAL SPECIFICATIONS

A range of options is available to suit individual requirements.

| Description | Features | | | VC 3600 |
|---|---|---|---|---|
| **Spindle** | 12000 r/min | 18.5/5.5 kW (24.8/7.4 Hp) (S3 15%/Cont.) | | ● |
| **Spindle cooling system** | 12000 r/min | 18.5/5.5 kW (24.8/7.4 Hp) (S3 15%/Cont.) | | ● |
| **Magazine** | Tool storage capacity | 20 ea | | ● |
| **Tool shank type** | BIG PLUS BT40 | | | ● |
| | BIG PLUS CAT40 | | | ○ |
| | BIG PLUS DIN40 | | | ○ |
| **Coolant** | FLOOD | 0.15 Mpa, 0.4 kW | | ● |
| | TSC | 2 MPa, 1.5kW | | ○ |
| | SHOWER | 0.17 MPa, 1.1 kW | | ○ |
| | FLUSHING | 0.1 MPa, 1.1 kW | | ○ |
| | Oil Skimmer | Belt type | | ○ |
| | MQL | | | ○ |
| **Precision machining option** | AICC II (200 Block) | | | ● |
| **Measurement & Automation** | Automatic tool measurement | TS27R | | ○ |
| | Automatic tool breakage detection | | | ○ |
| | Automatic workpiece measurement | OMP40 | | ○ |
| | Automatic front door with safety edge | | | ○ |
| **ACCESSORIES Option** | Chip pan | | | ● |
| | Chip conveyor | Hinged type(Rear) | | ○ |
| | | Magnetic scraper type(Rear) | | ○ |
| | Chip bucket | | | ○ |
| | Air blower | | | ○ |
| | Air gun | | | ○ |
| | Coolant gun | | | ○ |
| | Mist collector | | | ● |
| | OPERATOR CALL LAMP | 3-COLOR SIGNAL TOWER (LED) | | ● |
| | LEVELING BLOCK & BOLT | | | ● |
| | ASSEMBLY & OPERATION TOOLS KIT | | | ● |
| | TOP COVER | | | ● |
| | 4TH AXIS PREPARATION CABLING FOR SERVO/ 1-PNEUMATIC PIPING | FACTORY READY MADE | | ○ |
| | 4TH AXIS WITH CNC R.TABLE [1)] | AVAILABLE SIZE | Ø170mm | ○ |
| | | SERVO MOTOR | DEPENDS ON THE TABLE | ○ |
| | ANCHORING[2)] | J-BOLT | | ○ |
| | | SIDE CLAMP & Chemical Anchor Bolt | | ○ |
| | AUTO DOOR | | | ○ |
| | AIR GUN | | | ○ |
| | COOLANT CHILLER | | | ○ |
| **Customized Special Option** | DRUM CHIPCONVEYOR | HINGE TYPE | | ○ |
| | | SCRAPER TYPE | | ○ |

*✳ Please contact DN Solutions to select detailed steady rest specifications.*

● *Standard* ○ *Optional* X *Not applicable*

*1) PLEASE INQUIRE DN Solutions R&D DEPARTMENT WHEN END-USER SELECT.*

*2) PLEASE REFER TO FOUNDATION DRAWING IN RELATION TO ANCHORING. IF MORE DETAIL INFORMATION WANT,*

⚠ *Fire Safety Precautions* | *There is a high risk of fire when using non-water-soluble cutting fluids, processing flammable materials, neglecting the controlled and careful use of coolants and modifying the machine without the consent of the manufacturer. Always check the SAFETY GUIDELINES carefully before using the machine.*

# PERIPHERAL EQUIPMENT

### Hydraulic/Pneumatic Fixture Line option

Users who intend preparing equipment for hydraulic / pneumatic fixtures should consult DN Solutions to determine correct specification.

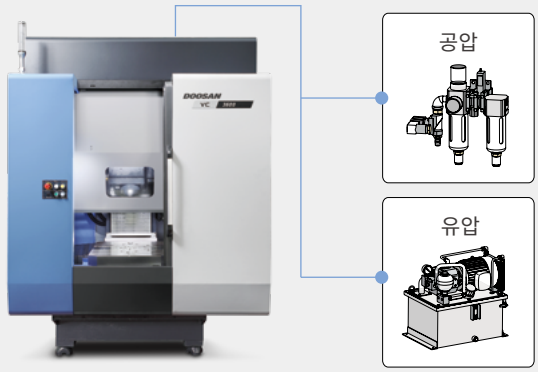


### TSC option

The through-spindle coolant (TSC)system delivers higher machining efficiency (optional).

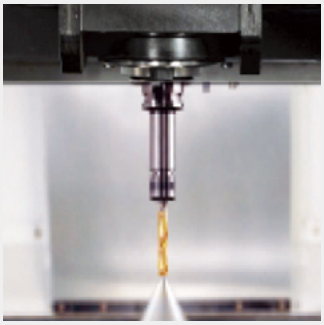

### Automatic Tool Length Measurement Device option

The Automatic Tool Length Measurement Device monitors excessive tool wear or breakage, and can be used for automatic tool setting.

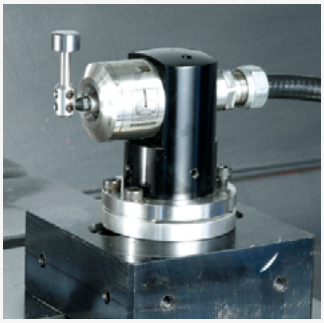

### An auxiliary chip box

An auxiliary chip box for effective filtering of fine aluminum chips is available as an optional feature

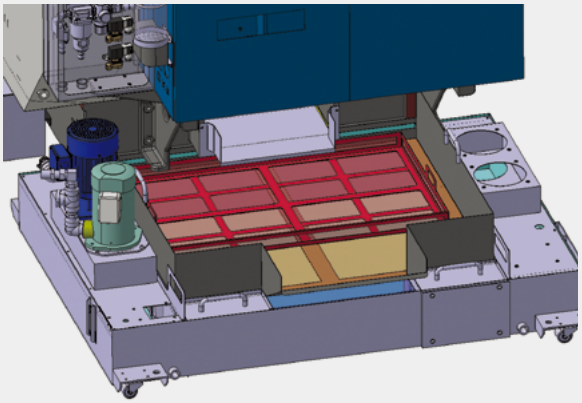

### Top Cover

The top cover (standard feature) prevents coolant splash, thereby maintaining a clean working environment.

### Chip Conveyor option

Long

Short

Needle

Sludge

| Work & Chip Size / Conveyor Type | | Carbon steel | | | Cast iron | | Aluminium | | |
|---|---|---|---|---|---|---|---|---|---|
| | | Long | Short | Needle | Short | Sludge | Long | Short | Needle |
| Hinged Belt Type | | ○ | △ | X | △ | X | ○ | △ | X |
| Scraper Type | General Type | X | ○ | △ | ○ | △ | X | △ | X |
| | Magnetic Type | X | ○ | ○ | ○ | ○ | – | – | – |
| Drum Filter Type | Hinged Type | ○ | △ | X | △ | X | ○ | △ | X |
| | Scraper Type | X | ○ | △ | ○ | △ | X | ○ | △ |

○ : Suitable, △ : Possible, X : Not suitable

### Variable Control of Work Piece Load

Issuing an M-code corresponding to the work weight can change pallets at a speed appropriate for the weight.

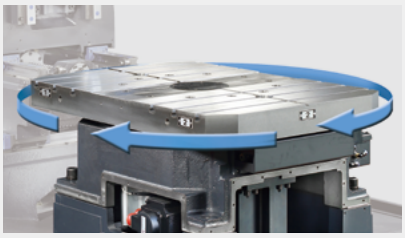

**M 384:**
0~120 kg (biased load)

**M 380:**
120~200 kg (biased load)

# DN SOLUTIONS FANUC i PLUS

DN Solutions Fanuc i Plus is optimized for maximizing customer productivity and convenience.

## 15 inch screen + new operation panel

DN Solutions Fanuc i Plus' operation panel enhances operating convenience by incorporating common-design buttons and layout, and features the Qwerty keyboard for fast and easy operation.

### DN Solutions Fanuc i Plus

- 15 inch color display
- Intuitive and user-friendly design

### USB & PCMCIA card

### QWERTY keyboard

- EZ-guide i standard
- Ergonimic operator panel
- 2MB Memory
- Hot key

## Hoy Key

**Frequently used functions can be accessed quickly and easily by clicking the hot key buttons.**

1. Tapping Retract function: A function for releasing a tool by reverse rotating the spindle in the Manual mode when the tool is caught due to power shutdown, emergency stop or NC resetting during the machining process.
2. Return to home position with single-touch operation: Pressing the button in the Manual mode returns the z axis to the primary home position.
3. Return to ATC position: Pressing the button in the Manual mode returns the z axis to the secondary home position, where the tool magazine can rotate.
4. Next Tool Change function: Pressing the button to exchange adjacent tools in the Manual mode calls [Present Tool Number + 1] of the adjacent tool for automatic exchange of the tool.

Pressing the button in the Manual mode moves the Y and Z axes to the primary home positions to enable APC function. While the One-touch APC CHANGE POSITION key is active, the "REF" selector button lamp flashes.

# NUMERIC CONTROL SPECIFICATIONS

FANUC

| Item | | Specifications | DN Solutions Fanuc i (0i PLUS) VC 3600 |
|---|---|---|---|
| Controlled axis | Controlled axes | | 3 (X,Y,Z) |
| | Simultaneously controlled axes | | 4 axes |
| | Additional controlled Axis | Add 1 Axis (5th Axis) | ● |
| Data input/output | Fast data server | | ○ |
| | Memory card input/output | | ● |
| | USB memory input/output | | ● |
| | Large capacity memory(2GB)*2 | Available Option only with 15” Touch LCD (iHMI Only) *2) | ○ |
| Interface function | Embedded Ethernet | | ● |
| | Fast Ethernet | | ○ |
| | Enhanced Embedded Ethernet function | | ● |
| Operation | DNC operation | Included in RS232C interface. | ● |
| | DNC operation with memory card | | ● |
| Program input | Workpiece coordinate system | G52 - G59 | ● |
| | Addition of workpiece coordinate system | G54.1 P1 X 48 (48 pairs) | ● |
| | Tool number command | | T4 digits |
| | Tilted working plane indexing command | G68.2 TWP | ○ |
| Feed function | AI contour control I | G5.1 Q_, 40 Blocks | X |
| | AI contour control II | G5.1 Q_, 200 Blocks | ● |
| | AI contour control II | G5.1 Q_, 600 Blocks | X |
| | AI contour control II | G5.1 Q_, 1000 Blocks *1) | X |
| | High smooth TCP | | X |
| Operation guidance function | EZ Guidei (Conversational Programming Solution) | | ● |
| | iHMI with Machining Cycle | Only with 15” Touch LCD standard *2) | X |
| | EZ Operation package | | ● |
| Setting and display | CNC screen dual display function | | ● |
| Network | FANUC MTConnect | | ✪ |
| | FANUC OPC UA | | ✪ |
| Others | Display unit | 10.4" color LCD | X |
| | | 15" color LCD | X |
| | | 15" color LCD with Touch Panel | ● |
| | Part program storage size & Number of registerable programs | 640M(256KB)_500 programs | X |
| | | 1280M(512KB)_1000 programs | X |
| | | 2560M(1MB)_1000 programs | X |
| | | 5120M(2MB)_1000 programs | ● |
| | | 10240M(4MB)_1000 programs | X |
| | | 20480M(8MB)_1000 programs | X |
| | | 2560M(1MB)_2000 programs | X |
| | | 5120M(2MB)_4000 programs | X |
| | | 10240M(4MB)_4000 programs | X |
| | | 20480M(8MB)_4000 programs | X |

*1) The number of look-ahead blocks may be changed or limited depending on the peripheral device or the configuration of the internal NC system.
*2) Available Option only with Fanuc i plus iHMI

● *Standard* ○ *Optional* X *N/A* ✪ *Available*

Network: FANUC MT Connect and FANUC OPC UA available.

# POWER | TORQUE | TABLE DIMENSIONS

## Spindle

Max. Spindle speed: **12000** r/min

Max. Spindle motor power : **18.5** kW
24.8 Hp

Max. spindle motor torque : **95** N.m
70.1 lbf-ft

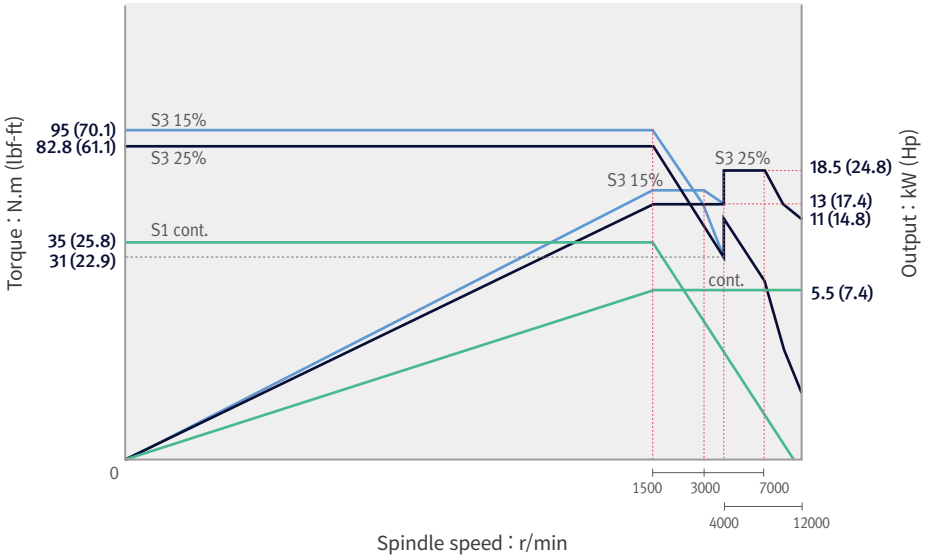


## Table

T-SLOT

TAP HOLE

*Units : mm (inch)*

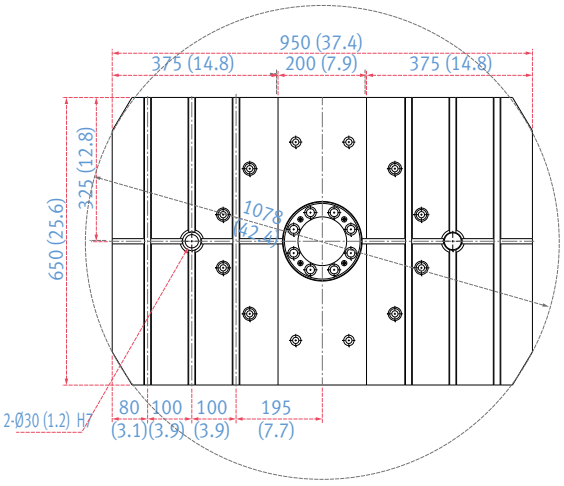


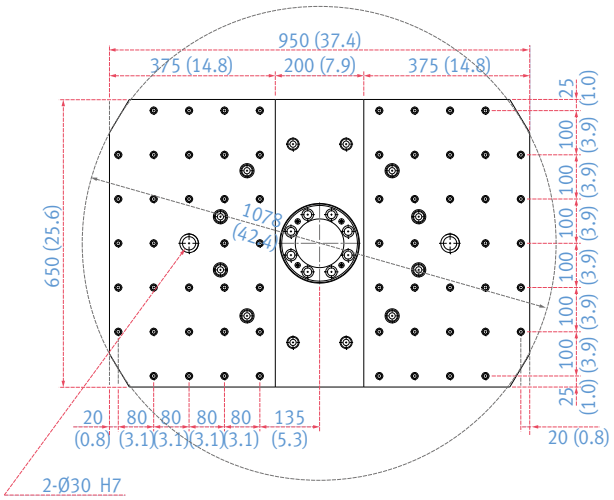


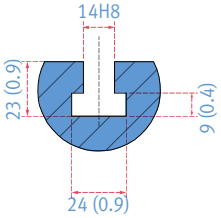


T-SLOT

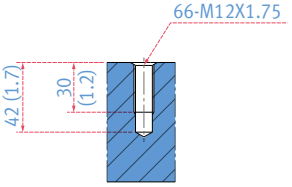


TAP SECTION

# DIMENSIONS

*Units : mm (inch)*

TOP

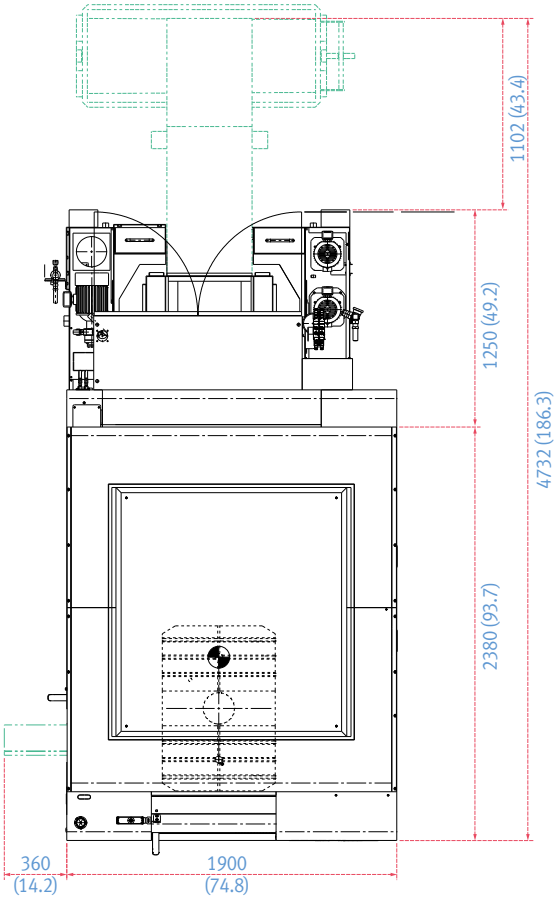


SIDE

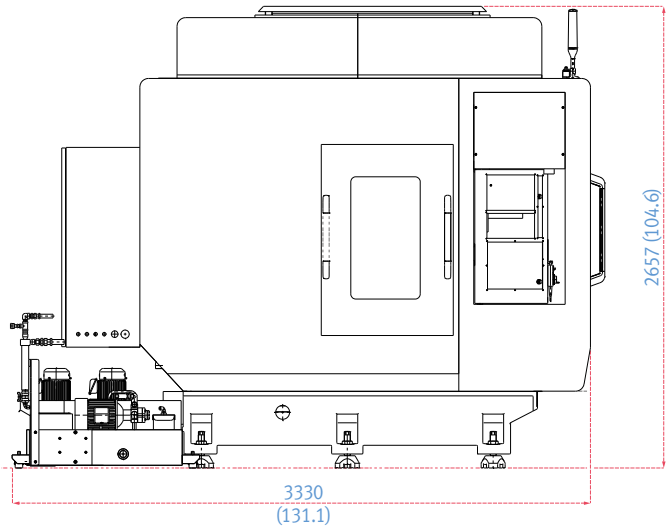


FRONT

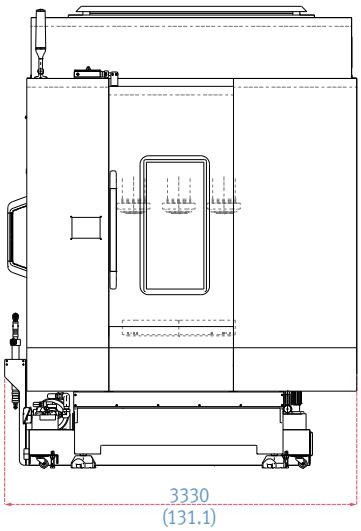


* Some peripheral equipment can be placed in other areas.

# MACHINE SPECIFICATIONS

| Description | | | Unit | VC 3600 |
|---|---|---|---|---|
| **Travels** | Travel distance | X axis | mm (inch) | 520 (20.5) |
| | | Y axis | mm (inch) | 360 (14.2) |
| | | Z axis | mm (inch) | 465 (18.3) |
| | Distance from spindle nose to table top | | mm (inch) | 150 ~ 615 (5.9 ~ 24.2) |
| **Table** | Table size | | mm (inch) | 2-650 x 375 (2-25.6 x 14.8) |
| | Table loading capacity | | kg (lb) | 2-200 (2 - 440.9) |
| | Table surface type | | mm (inch) | TAP HOLE TYPE(2X32-M12XP1.75)<br>{T-SLOT TYPE(2X3-100x14H8)}* |
| **Spindle** | Max. spindle speed | | r/min | 12000 |
| | Tool taper | | - | ISO #40 |
| | Spindle power (S3 15%/Cont.) | | kW (Hp) | 18.5/5.5 (24.8 / 7.4) |
| | Max. spindle torque (S3 15%) | | N·m (lbf-ft) | 95 (70.1) |
| **Feedrates** | Rapid traverse rate | X axis | m/min (ipm) | 48 (1889.8) |
| | | Y axis | m/min (ipm) | 48 (1889.8) |
| | | Z axis | m/min (ipm) | 48 (1889.8) |
| **Automatic Tool Changer** | Type of tool shank | Tool shank | - | BT 40 {CAT40/DIN40}* |
| | | Pull stud | - | MAS403 P40T-1(15°) |
| | Tool storage capa. | | ea | 20 |
| | Max. tool diameter | Continous | mm (inch) | 90 (3.5) |
| | | Without Adjacent Tools | mm (inch) | 125 (4.9) |
| | Max. tool length | | mm (inch) | 200 (7.9) |
| | Max. tool weight | | kg (lb) | 5 (11.0) |
| | Max. tool moment | | N·m (ft-lbs) | 9.8 (7.2) |
| | Tool seletion | | - | MEMORY RANDOM |
| | Tool change time | Tool-to-tool | sec | 1.3 |
| | | Chip-to-chip | sec | 2.6 |
| **Power source** | Electric power supply (rated capacity) | | kVA | 22.1 |
| | Compressed air supply | | Mpa (psi) | 0.54 |
| **Tank capacity** | Coolant tank capacity | | L (gal) | 270 |
| **Machine Dimensions** | Height | | mm (inch) | 2657 (104.6) |
| | Length | | mm (inch) | 3330 (131.1) |
| | Width | | mm (inch) | 1900 (74.8) |
| | Weight | | kg (lb) | 5400 (212.6) |
| **Control** | CNC system | | - | DN Solutions Fanuc i Plus, HEIDENHAIN TNC 620 NC |

*{ } : Option

# WHY DN SOLUTIONS

The DN Solutions promise, MACHINE GREATNESS, has two important meanings. The first is simple: DN Solutions makes great machines. The second is a challenge to our end-users. With a product line that is this comprehensive, accurate and reliable, we equip our customers to machine greatness. The big question: **Why should you choose DN Solutions over other options?**

Here's why···

WHAT YOU MAKE AND HOW YOU MAKE IT MATTERS—SO MAKE IT GREAT WITH DN SOLUTIONS.

## UNBEATABLE MACHINES

You won't find a more comprehensive range or a better combination of value, performance and reliability anywhere else.

## READILY AVAILABLE - ANYWHERE IN THE WORLD

Machining centres (including 5-axis machines), lathes, multi-tasking turning centres and mill-turn machines, and horizontal borers with best-in-class specifications are all available···ready to install.

## ROBUST PRODUCT LINE

We offer an impressive range of machine models and hundreds of configurations. Whatever your machining needs and requirements, there's a DN Solutions for you.

## EXPERT SERVICE

Our dedicated, experienced and knowledgeable team is totally committed to improving your productivity, growth and success.

# CUSTOMER SUPPORT AND SERVICES

**We're there for you whenever you need us.**

We help our customers operate at maximum efficiency by providing them with a range of tried, tested and trusted services - from pre-sales consultancy to post-sales support.

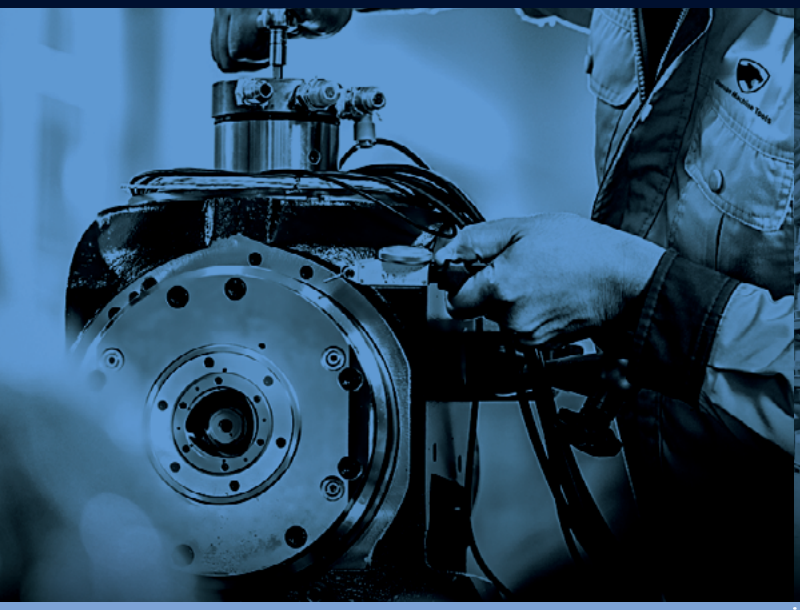

## FIELD SERVICES

- On-site service
- Machine installation and testing
- Scheduled preventive maintenance
- Machine repair service

## PARTS SUPPLY

- Supplying a wide range of original DN Solutions spare parts
- Parts repair service

## TRAINING

- Programming, machine setup and operation
- Electrical and mechanical maintenance
- Applications engineering

## TECHNICAL SUPPORT

- Supports machining methods and technology
- Responds to technical queries
- Provides technical consultancy

# RESPONDING TO CUSTOMERS
# ANYTIME, ANYWHERE

## DN Solutions Global Network

DN Solutions provides systems-based professional support services, before and after the machine tool sale, by responding quickly and efficiently to customers. By supplying spare parts, product training, field service and technical support, we provide the expert care, attention and assistance our customers expect from a market leader.

## Global sales and service support network

| | |
|---|---|
| 4 | Corporations |
| 156 | Dealer networks |
| 51 | Technical centers<br>Technical Center, Sales Support, Service Support, Parts Support |
| 200 | Service posts |
| 3 | Factories |

dn-solutions.com


***Head Office***
22F T Tower, 30, Sowol-ro 2-gil
Jung-gu, Seoul, Korea, 04637
Tel +82-2-6972-0370/0350
Fax+82-2-6972-0400

***DN Solutions America***
19A Chapin Road, Pine Brook
New Jersey 07058, United States
Tel: +1-973-618-2500
Fax:+1-973-618-2501

***DN Solutions Europe***
Emdener Strasse 24, D-41540
Dormagen, Germany
Tel: +49-2133-5067-100
Fax:+49-2133-5067-111

***DN Solutions India***
No.82, Jakkuar Village
Yelahanka Hobil, Bangalore-560064
Tel: + 91-80-2205-6900
E-mail: india@dncompany.com

***DN Solutions China***
Room 101,201,301, Building 39 Xinzhuan
Highway No.258 Songjiang District
China Shanghai (201612)
Tel: +86 21-5445-1155
Fax:+86 21-6405-1472

***Sales inquiry***
sales@dncompany.com


* For more details, please contact DN Solutions.

* Specifications and information contained within this catalogue may be changed without prior notice.

DN SOLUTIONS

ver. EN 220518 SU